LATCH®

"M3" SERIES
ELECTRONIC SMART LOCK
in a Steel Wood Edge Door

INSWING / OUTSWING
"IMPACT"

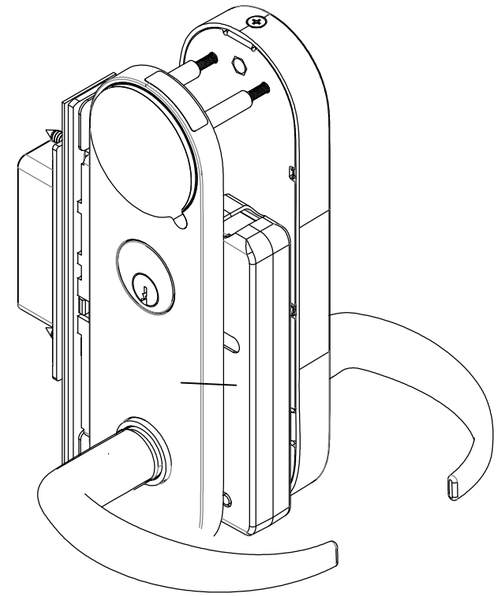

L F Schmidt

L. F. SCHMIDT
LICENSE
No. 43409
STATE OF FLORIDA
PROFESSIONAL ENGINEER

Digitally signed by Lyndon F Schmidt
Date: 2025.06.23 13:04:46 -04'00'

This item has been digitally signed and sealed by **L. F. Schmidt, P.E.** on the date adjacent to the seal.

Printed copies of this document are not considered signed and sealed and the signature must be verified on any electronic copies.

THIS PRODUCT APPROVAL IS VALID ONLY FOR THE STATE OF FLORIDA

GENERAL NOTES

1. This product has been evaluated and is in compliance with the 8th Edition (2023) Florida Building Code (FBC) structural requirements including the "High Velocity Hurricane Zone" (HVHZ).

2. When used in the "HVHZ", this product complies with Section 1626 of the FBC and does not require an impact resistant covering.

3. When used in areas outside the "HVHZ" requiring wind borne debris protection, this product complies with FBC Sections 1609.1.2 & R301.2.1.2. and does not require an impact resistant covering. This product meets missile level "D" and includes Wind Zone 4 as defined in ASTM E 1996 and FBC Sections 1609.1.2.2 & R301.2.1.2.1.

4. This product has been tested in the door panels as specified in this approval. Substitution into a similar product may be approved for use by the local Authority Having Jurisdiction. In all cases, the steel door used must possess a comparable current Florida Statewide product approval.
The door panel size and design pressure (DP) rating shall not exceed the sizes and DP ratings shown in this approval or the side hinged swing door approval being used.

5. Site conditions that deviate from the details of this drawing require further engineering analysis by a licensed engineer or registered architect.

6. Refer to the separate Florida Product Approval for the swing door used in conjunction with this component approval to determine the ability of the system to meet the water infiltration requirements for the "HVHZ".

7. All steel shall be protected as specified in Section 2222.6 of the FBC.

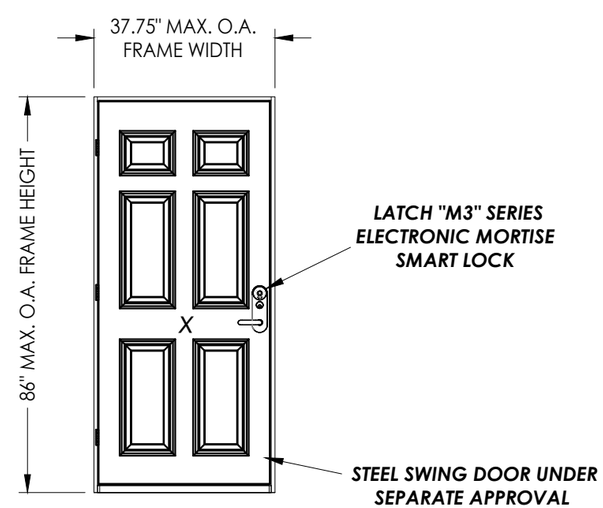

MAX FRAME DIMENSION	LOCK TYPE	DOOR MATERIAL	DESIGN PRESSURE (PSF)			
			INSWING		OUTSWING	
			POSITIVE	NEGATIVE	POSITIVE	NEGATIVE
37.75" x 86.0"	"M3" SERIES SMART LOCK	STEEL (WOOD EDGE)	+65.0	-70.0	+65.0	-70.0

TABLE OF CONTENTS

SHEET #	DESCRIPTION
1	Typical elevation, design pressures & general notes
2	M3 Series Lock details
3	Door panel details

Documents Prepared By:
Lyndon F. Schmidt
P.E. No. 43409
RW BUILDING CONSULTANTS, INC.
P.O. Box 230, Valrico, FL 33595
Phone No.: 813.659.9197
FBPE Registry No. 9813

PRODUCT: LATCH "M3" SERIES ELECTRONIC LOCK

PART OR ASSEMBLY: TYPICAL ELEVATION, DESIGN PRESSURES & GENERAL NOTES

NO.	DATE	REVISIONS	BY

DATE: 6/17/25
SCALE: N.T.S.
DWG. BY: RW
CHK. BY: LFS
DRAWING NO.: FL-26345.5
SHEET 1 OF 3

© 2025 R.W. BUILDING CONSULTANTS INC.

Z:\2023 FBC Drawings\Latch, Inc\FL-26345 R6\FL-26345.5.dwg

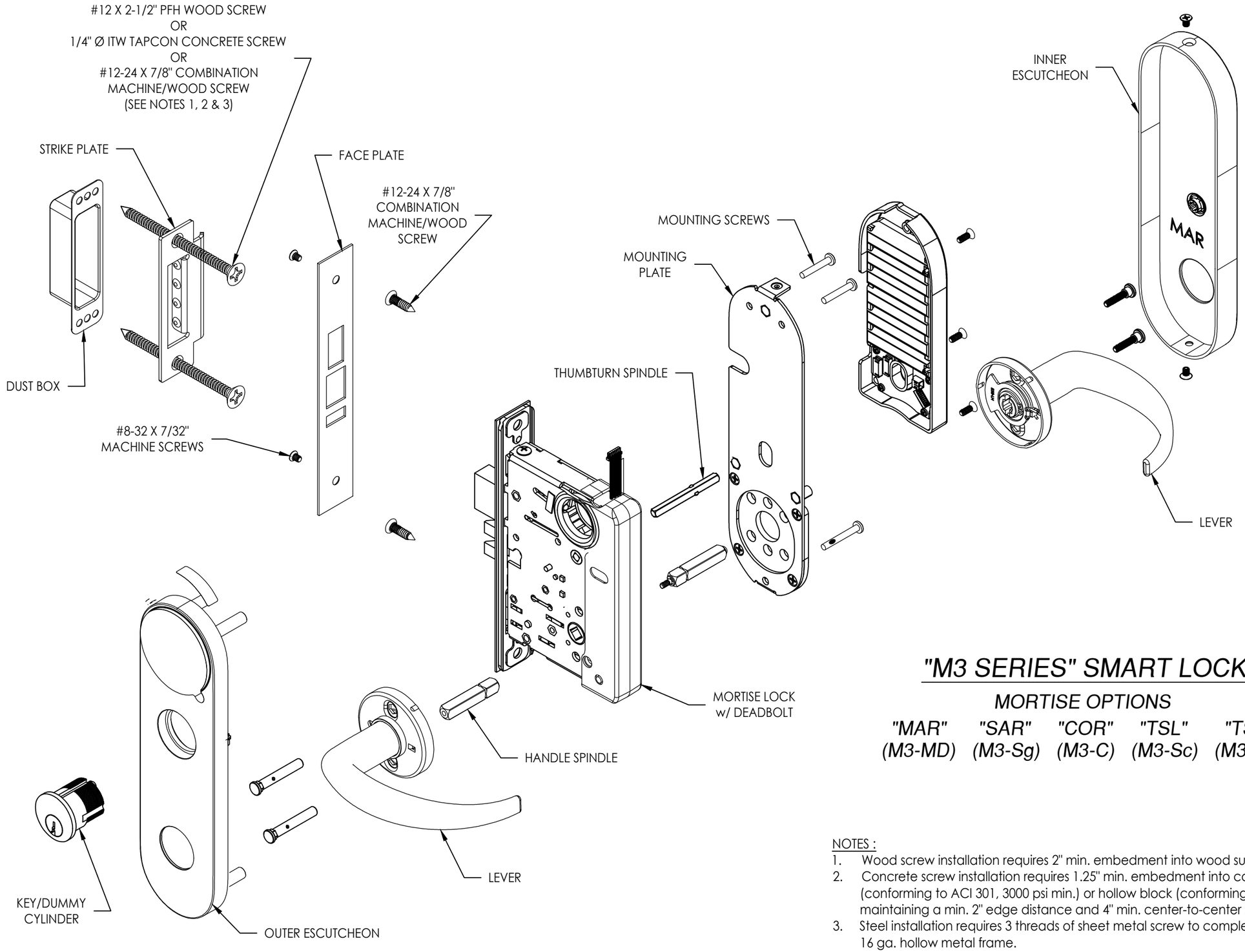

"M3 SERIES" SMART LOCK

MORTISE OPTIONS

"MAR" (M3-MD) "SAR" (M3-Sg) "COR" (M3-C) "TSL" (M3-Sc) "TS" (M3-B)

NOTES :

1. Wood screw installation requires 2" min. embedment into wood substrate (G>=0.55).
2. Concrete screw installation requires 1.25" min. embedment into concrete (conforming to ACI 301, 3000 psi min.) or hollow block (conforming to ASTM C-90) and maintaining a min. 2" edge distance and 4" min. center-to-center spacing of anchors.
3. Steel installation requires 3 threads of sheet metal screw to completely penetrate through 16 ga. hollow metal frame.

Documents Prepared By:
Lyndon F. Schmidt
P.E. No. 43409
RW BUILDING CONSULTANTS, INC.
P.O. Box 230, Valrico, FL 33595
Phone No.: 813.659.9197
FBPE Registry No. 9813

PRODUCT: "M3" SERIES ELECTRONIC LATCH LOCK

PART OR ASSEMBLY: LOCK DETAILS

NO.	DATE	REVISIONS	BY

DATE: 6/17/25
SCALE: N.T.S.
DWG. BY: RW
CHK. BY: LFS
DRAWING NO.: FL-26345.5
SHEET 2 OF 3

© 2025 R.W. Building Consultants Inc.

Z:\2023 FBC Drawings\Latch, Inc\FL-26345 R6\FL-26345.5.dwg

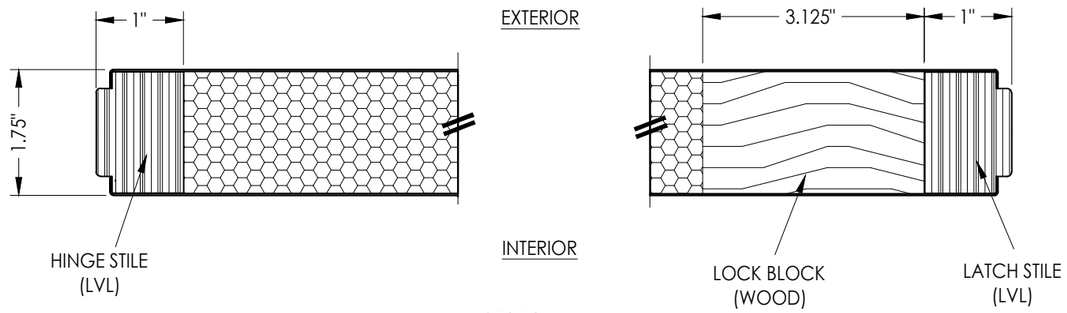

SECTION A-A

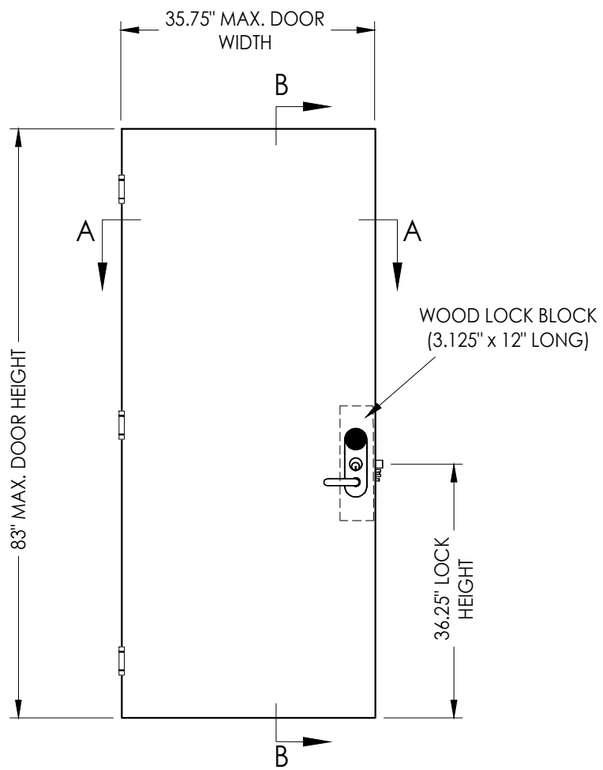

STEEL DOOR PANEL
JELD-WEN 7' 0" (Wood Edge)

DOOR SKIN: 0.021" MIN. THICK GALV. STEEL
(Fy = 51,500 PSI MIN.)

NOTE: Door panels shown as tested. Refer to current Florida Statewide Product Approval for actual specifications and installation instructions (See General Note 4, Sheet 1).

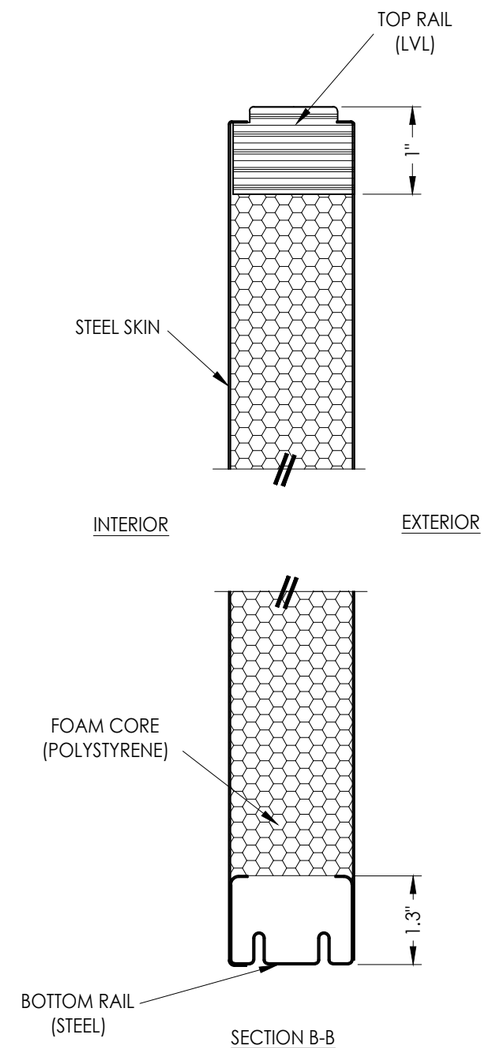

SECTION B-B

Documents Prepared By:
Lyndon F. Schmidt
P.E. No. 43409
RW BUILDING CONSULTANTS, INC.
P.O. Box 230, Valrico, FL 33595
Phone No.: 813.659.9197
FBPE Registry No. 9813

PRODUCT: *"M3" SERIES ELECTRONIC LOCK LATCH*

PART OR ASSEMBLY: *DOOR PANELS DETAILS*

NO.	DATE	BY

REVISIONS

DATE: 6/17/25
SCALE: N.T.S.
DWG. BY: RW
CHK. BY: LFS
DRAWING NO.: FL-26345.5
SHEET 3 OF 3

© 2025 R.W. BUILDING CONSULTANTS INC.

Z:\2023 FBC Drawings\Latch, Inc\FL-26345 R6\FL-26345.5.dwg